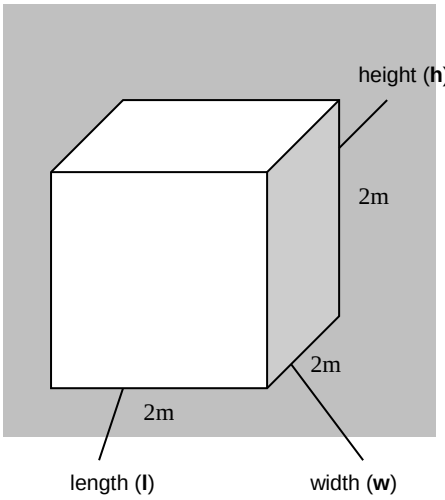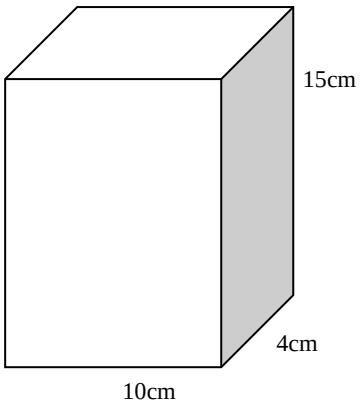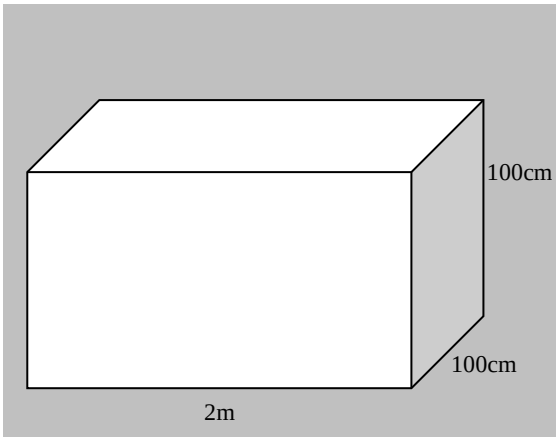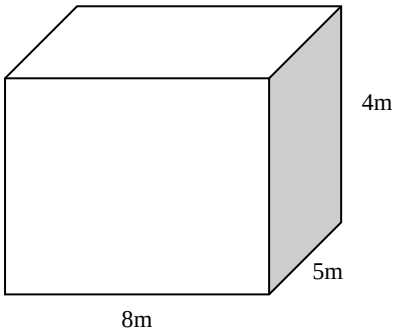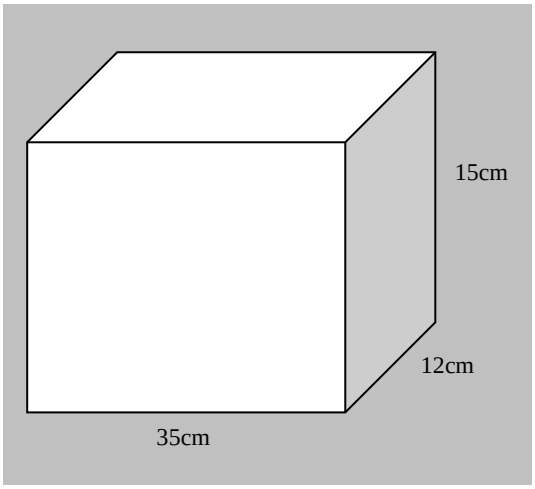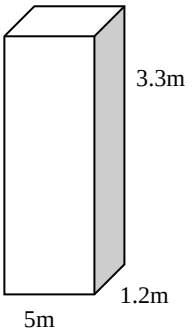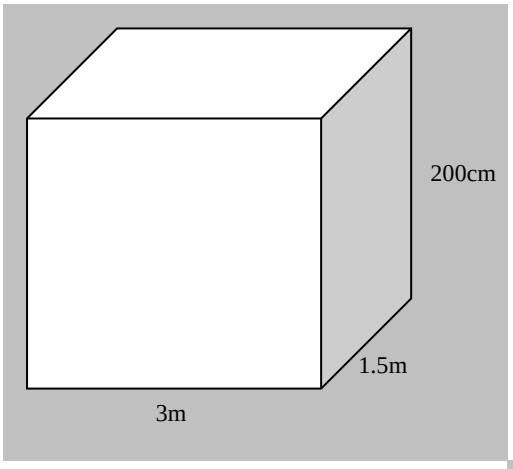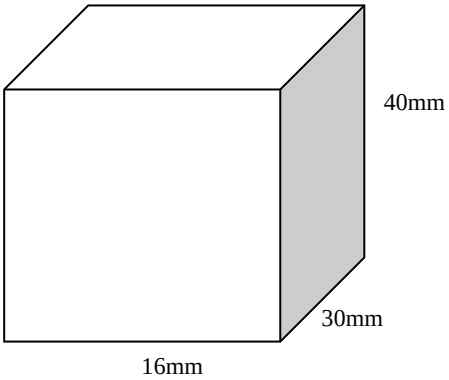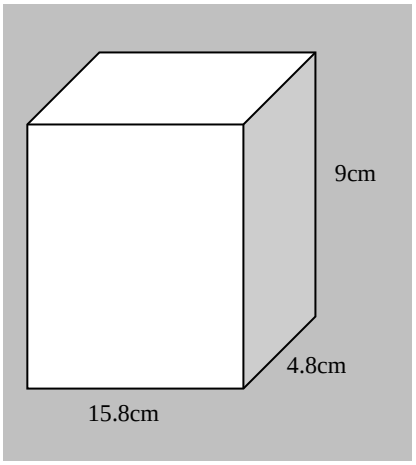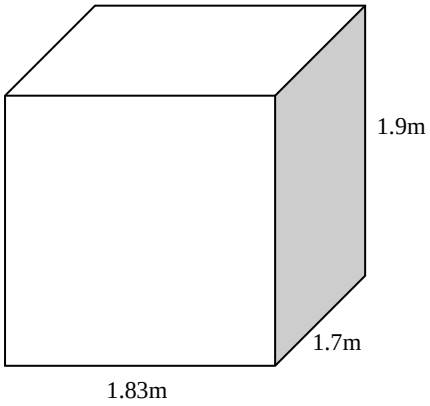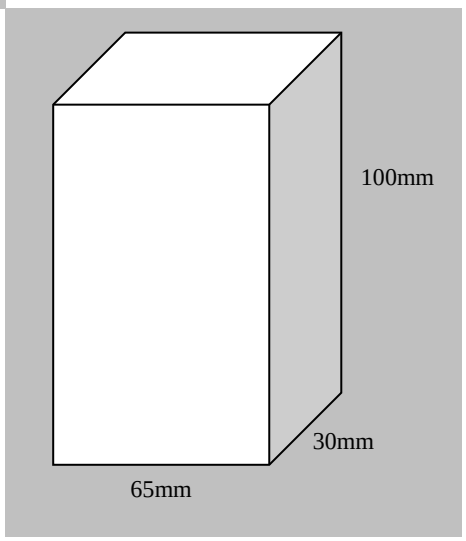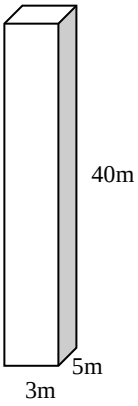Volume = l x w x h. See if you can work out the volume of the shapes below.